Swarm-Robot System Based on Wireless sensor Network

Jian-sheng PENG[1,2], Xing LI[1], Zhi-qiang QIN[3] ,Wei LI[2]
[1]China Institute of Atomic Energy
P.O.Box 275-36
Beijing China
[2]Department of Physics and Electronic Engineering
Hechi University
Yizhou, China
[3]Hunan University of Science and Technology
Xiangtan ,China
{sheng120410@163.com, 77058088, 1692759628@qq.com}

Journal of Digital Information Management

ABSTRACT: *The study about the swarm-robot system is one of the most important directions of multitudinous robots system. It is an extraordinary challenged issue which how to communicate with each swarm-robot to cooperate together to accomplish a mission in numerous units. The swarm-robot system, which is based on CC2510 wireless sensor network, with the Radio Frequency of FHSS as the communication mode, has realized the swarm-robot unit sensor organ information coordination alternately fleet that improving the stability, interference immunity and transferability. The coordinating scheme possesses availability and practicability has been proved.*

Categories and Subject Descriptors: I.2.9 [Robotics]; Sensors: **C.2.1 [Network Architecture and Design];** Wireless communication

General Terms: Radio frequency, Robots, Swarm-robot system

Keywords: Swarm-robot, CC2510, FHSS, Coordination

Received: 1 March 2012, Revised 4 May 2012, Accepted 15 May 2012

1. Introduction

It is effects on efficiency of the task to be finished that the unit capacity bulk and how to realize the numerous robots communicate availability and reliability in the swarm-robot. In the traditional multitudinous robot system, some take the wire communication way, some adopt the FM, AM modulation communication way and others put use to infrared ray communication way[1-3]. Such traditional communication mode exists on variety of maladies and they are satisfied with the request of swarm-robot system.

Radio frequency is provided with powerful transmit modulated signal. The system will send the signal with best quality and the topmost sensitivity receive modulated signal even in the case of there is interference signal and blocking signal. CC2510 is a low-power wireless SCM with the 8051 core. The wireless RF is integrated in depth. Wireless communication major work in 315MHz, 0433MHz 0868MHz 0915, MHz02.4GHz frequency channel in ISM and SRD. The utilization set up of the swarm-robot wireless network can avoid complicate the system so that it leads to receive the high quality communication, save electric energy and cut down on cost. The data transmission rate of CC2510 RF transceiver can reach 500kbps, wins the data transmission rate frequency, it can be satisfied with the swarm-robot system communication request[4, 5].

2. The design project of system

The wireless SCM CC2510 support various communication ways. The user can establish the communication protocol according to the demand of customers and existing communication protocol. The main idea of this article is introduce the communication protocol which is suitable for swarm-robot system-FHSS

FHSS is a communication way with strong anti-interference ability[6-15]. The major principle as follows:

1. If the media free then transmit;

2. If the media busy then change the channel continue to transmit until it succeed or come to nothing for the transmission goes long time lead to overtime and exit.

We may understand like this: listening prior to speaking, and listening with speaking. FHSS has more flexibility, which belongs to SSC, and can reasonably use space resources better.

In the swarm-robot sport system which base on CC2510,

once a robot transmits a data message (e.g. current temperature) later, it doesn't receive a reply from the main engine, then the channel which is inconformity main engine located to robot located, or there is a same frequency carrier into the atmosphere at present. Then, the robot changes the transmit channel at once and goes on trying transmitting. It doesn't drop out until it takes over the answer signal or transmit failure long time generate over time. The Transmitting terminal robot will continuously change the transmit channel when it sent data information doesn't succeed, thus, it is rather easy to keep same to the transmitting terminal and receiving terminal. It takes the communication from one channel to another channel, so that increase the system communication channel. The schematic diagram of FHSS communication has shown as follows.

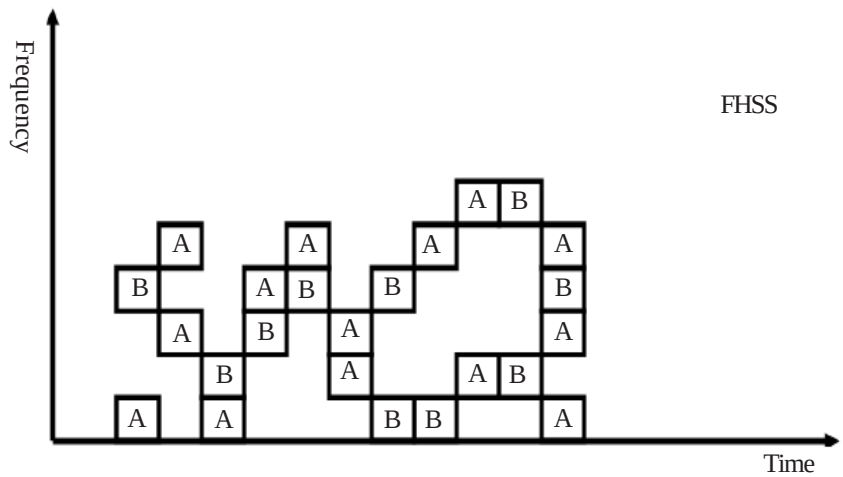

Figure 1. FHSS Communication Schematic Diagram

In the FHSS, the main task is how to realize the unification of the transmitting and receiving terminal in the process of changing the channel. We should as less as possible consume time when it changes the channel [16-18]. FHSS is a mull-channel communication mode. It is necessary for swarm-robot system put into use to change the channel. For wireless SCM CC2510, if we set the frequency channel as 433MHz, we just need to change the value of register CHANNR when we change the channel. Once we confirm the transmitting and receiving terminal, the channel can change continuously to ensure the communication has already finished in the process of communication. In the swarm-robot system, the quantity of system channel can get a setting according to oneself actual demand. In case the channel is too many, we increase the available communication channel but it also can cause a problem: we need more time to change the channel. Thus there is lower communication efficiency. If the frequency channels are too few, then it will lead to the available communication frequency channel also to too few, the robot will change the channel continuous to transmit data. Then it also can lead to reduce the communication frequency. Therefore, we should confirm the number of frequency channel on the basis of swarm-robot individual number and other certain factor to make the communication system being in higher status. All of this is to make the swarm-robot system transmit the information unblocked and rapid, it better for swarm-robot member cooperating to perform the task.

3. System texture

The swarm-robot system on the basis of wireless SCM CC2510 requires each swarm-robot may perform the communication smooth. There are varies sensor and server on the robot, they may move on to somewhere to execute the environment information acquisition in line with the main engine. Then send back the collected data to the main engine by FHSS. The main engine will make a relevant dispose and return the answer signal when it receives the data message. Then it will wait the relevant button to transmit the system transmit the information unblocked and rapid, it better for swarm-robot member cooperating to perform the task.

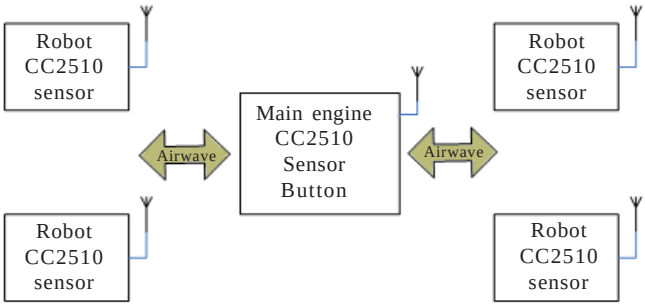

Figure 2. The Design of Swarm-Robot on the Basis of CC2510 System

Systemic robot according to the purpose of main engine moving onto specific site, collect the information and send back these messages to main engine. Main engine deal with the data when receive the messages. Main engine consists of CC2510 SCM, LCD liquid crystal and button. We may check every robot's positional environment parameter by choosing the button. We also can use the button to command the robot work. Once the terminal

robot monitors the environment parameter which has shifts, then discrete sampling to main engine at once and update the environment parameter information. It requests the next task to main engine.

4. Main hardware design of system

4.1 CC2510 SCM minimum system

The system adopts CC2510 low-power dissipation SCM which is based on 32Kb flash memory and 4KB RAM in the core of 8051. The SCM build-in RF radio circuit which just needs ordinary resistance, capacitance and inductance can work. The minimum system includes in the crystal oscillator circuit, reset circuit, RF radio circuit, JTAG port, power supply filtering and decoupling circuit [4]. The circuit of minimum system shows as chart 3.

4.2 Display circuit

Display circuit is made to use LCD5510 as the display device. LCD5510 is a cheap practical mobile liquid crystal. With black and white screen, its resolution ratio is 48 * 80, without word stock. User can write a program to display characters, Chinese characters, pictures, etc. Its own blue backlighting use 5-line serial communication, cut down on SCM IO port. The peripheral circuit rather simple, it just needs external decoupling capacitance. The circuit is shown as chart 4.

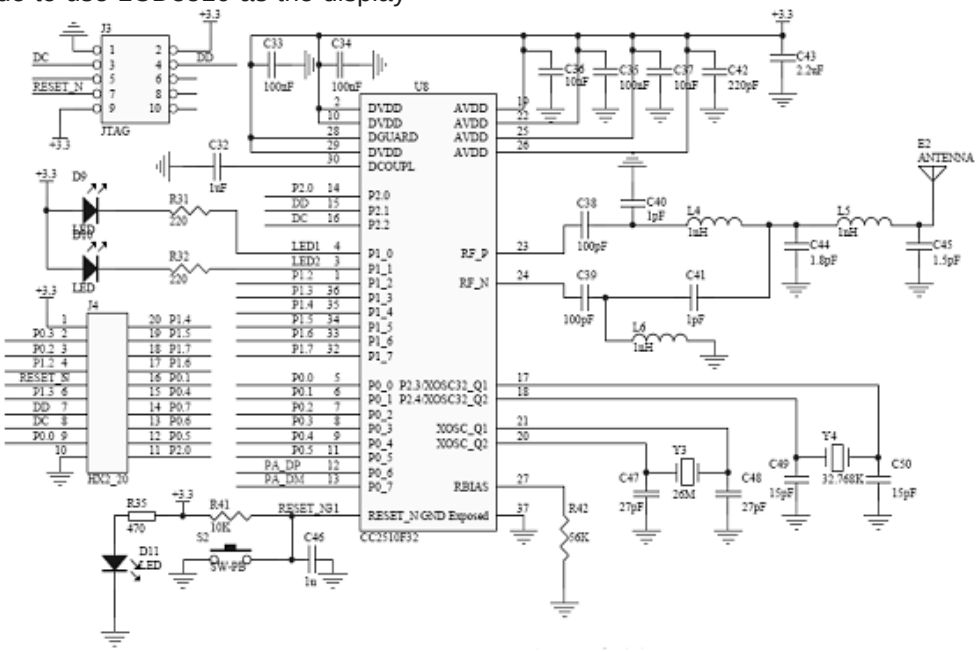

Figure 3. Minimum System Circuits

4.3 Acousto-optic warning

Acousto-optic circuit makes up an active buzzer and a luminous diode, and the driver is the triode. The PNP triode, Q2, is conducted when CC2510's P1.6 output low level, the buzzer buzzed and luminous diode lighted. The alarm circuit is shown as chart 5.

4.4 Ultrasonic circuits

4.4.1 Ultrasonic transmitter circuit

The ultrasonic transmitter circuit is shown as chart 6. Radiating circuit is consists of phase inverter 74LS04 and ultrasonic transmitting transducer T3. SCM CC2510 port P0.6 outputs about 40 kHz square signal. One signal through phase inverter transmits the ultrasonic transducer to one electrode. Another signal through the two-stage phase inverter transmits the ultrasonic transducer to another electrode. It can improve the ultrasonic emissive power that the push-pull form adds square signal at each end of ultrasonic transducer. Outgoing end adopts a couple of inverter parallel connection to improve the drive ability. On the one hand, pull-high resister R33, R34 can improve the inverter 74LS04 output high level drive ability. On the other hand, it can increase the damping effect of ultrasonic transducer. Shorten the freedom shake time.

4.4.2 Ultrasonic Receiving Circuits

Ultrasonic receiving circuits are shown as chart 7. Piezoelectric ceramics ultrasonic receptor LS2 received reflected and switched it as 40 kHz mill volt voltage signal.

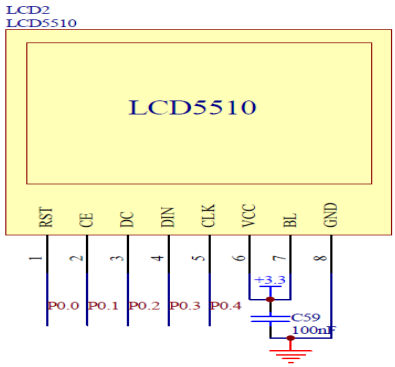

Figure 4. LCD5510 Liquid Crystal Circuit

The signal needs to via amplification and management, just can use in breaking of trigger SCM.

Received module is used in specified integrated-circuit preamplifier CX20106 to amplify and process received signal. CX20106 is constituted the preamplifier, by limiting amplifier, B.F., detector, integrator, and integer circuit.

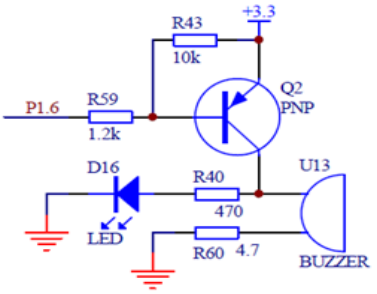

Figure 5. Alarm Circuit

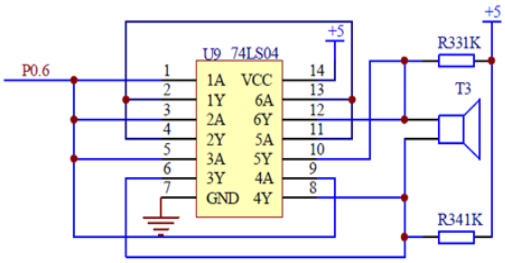

Figure 6. Ultrasonic Transmitter Circuit

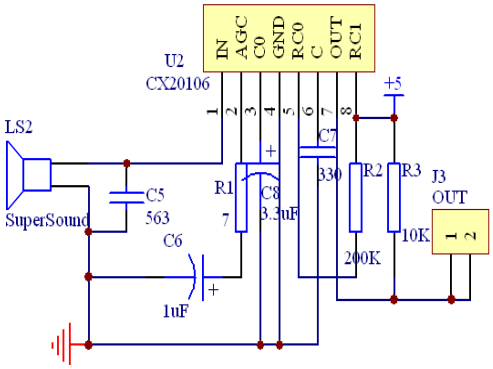

Figure 7. Ultrasonic receiving circuits

Preamplifier has AGC. What can guarantee is that the amplifier has higher gain and the amplifier can't overload when ultrasonic transducer receives further reflected signal output weak voltage. Regulate the circumscribed resistance R3 of chip pin 5, setting the centre frequency of filter on 40 kHz achieve good result. When received the signal is the same to filter centre frequency, the output pin 7 outputs the low level, and output pin 7 connect directly on the pin P0.5 of CC2510 to trigger interrupt.

4.5 Infrared Sensor Circuits

The system adopts infrared geminate transistors as the robot's tracking sensor. Every robot fit out 4 pairs of infrared geminate transistors. The Infrared sensor circuit is shown as chart 8. The resistance R36 makes a current limiting to the infrared launch tube, the R47 and the R48 constitute the reference source. That is to say the reference source is 3.3/2 = 1.65V. When infrared receiving tube (The LAMP in chart 8) hasn't received or received enough infrared, the internal resistance of infrared receiving tube will become higher to make the comparator positive input end exceed reverse input end. And the comparator produces outputs at the high level. When infrared receiving tube received enough infrared, the internal resistance becomes lower, the voltage of positive input end reduced. The comparator outputs low lever when the voltage is lower than reverse input end. According to principle of just described, the robots can use the infrared geminate transistors distinguish black guiding string in the runway, and achieve the tracking.

4.6 Temperature and Humidity Sensor Circuits

The system adopts DHT11 as temperature and humidity measurement sensor. DHT11 is a temperature and humidity integration digital sensor. The sensor includes a resistance-type hygrometric original and a NTC thermometric original, and it's connects a high-performance 8 bit SCM. It's just needs connect a data link and MPU to collect current time temperature and humidity data. DHT11 power consumption is low. The supply voltage is 5V with the 0.5mA average maximum current. The humidity measurement range is 20-90%RH. The temperature measurement range is 0-50!. All of these can feel up to general demand of measurement. Therefore, the system adopts DHT11 possesses briefness, costing low, low power consumption, etc. advantage. The connecting of circuits is very simple. It's just needs a decoupling capacitor and a pull-up resistor. The pull-up resistor is ascertained in the line of the length of data line. It's is 2.2k to 10k generally. Temperature and humidity sensor circuit is shown on chart 9.

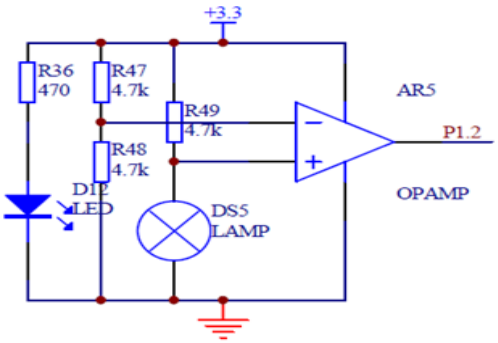

Figure 8. Infrared Sensor Circuits

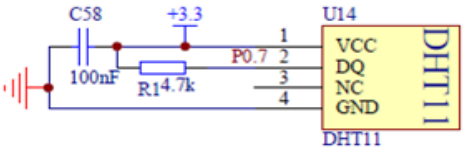

Figure 9. Temperature and Humidity Sensor Circuits

5. System Programming

5.1 The procedure achievement of FHSS receiving portion

The program flow chart of FHSS receiving (main engine) is shown on chart 10. The first, it should build a random number in the procedure to provide channel to frequency hopping. It should be notice that the array must same to receiving section. Otherwise it will lead to communicate unmorally for the difference between transmit and receiving terminal.

After the system electrify reset, it is beginning to initialize the CC2510's clock, power supply model, IO, timer, interrupt, RF, liquid-crystal display, etc. Next, the button

is detected whether be pressed. When the button has been pressed, then the main engine executes the relative operate or transmit the control signal to specified robot to command it work. If the button hasn't been pressed, then it word in receiving state. At the same time receiving section monitor constantly whether there is same frequency channel in the air. If it exists then receives, then returns the answer signal to inform the sender received succeed, proceeds data processing, updates the liquid crystal display, judges whether it is needed to transmit control signal to robot to command it work. The last, change the channel and detect whether there is a signal to which the channel fits itself.

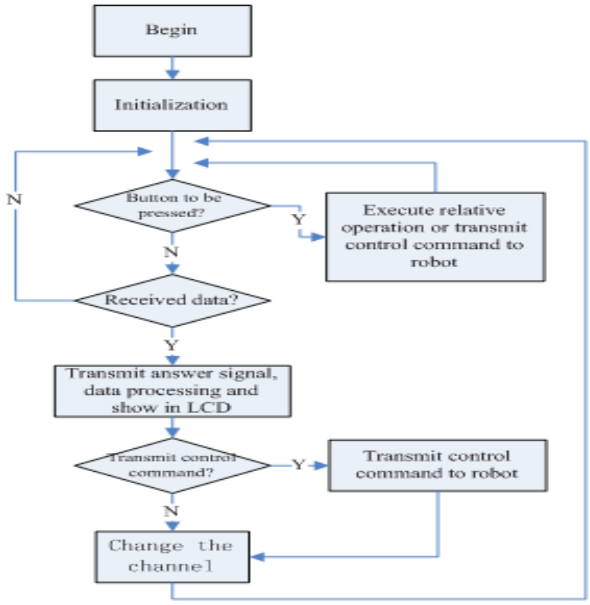

Figure 10. FHSS Receiving Portion

For CC2510 SCM change the communication channel, if the communication frequency range has been set in 433MHz, it's just need to change the value of register CHANNR. Following the code, it has provided the way to select the different channels.

```
if (++ channr_number == 6)
{
channr_number = 0;
}
Radioinit ( frequency, myaddr, channr_number);
```

Hereinto, *channr_number* sets the channel number of systems. The function *Radioinit* () set the RF communication frequency. When set frequency and address *myaddr*, we just need to change the value of *channer_number* to change the channel.

It can be adjusted channel to communicate when the procedure is executed. Here, the swarm-robot system just uses 6 channels. We can increase or decrease channels properly when elsewhere needs to use.

5.2 The realize of FHSS transmit procedure

FHSS transmit (terminal) section flow chart is shown as figure 11. Firstly, it's needs to be built a frequency hopping array which is the same to the receiving section to execute the frequency hopping normally. After the main engine finish initializing, it is beginning to detect whether has been received the control command from main engine. If it received, take relative actions, then detects every sensor whether there is update. It transmits data to main engine immediately once detects it exists. If the answer signal has been received, that has proved the main engine is monitoring the packet on the channel and communicate succeed. If the answer signal of main engine has not received. One side is the main engine does not monitor packet on this channelÿanother side is the main engine monitors the packet on this channel. But there is another robot transmits the data from this channel to main engine. The robot nodal points can't communicate normally with the main engine, at the same time the transmitting nodal points can't change the channel continue to transmit the packets until it come across the channel which is the same as main engine, and when the information channel is free, as main engine received the answer signal, it is success to transmit data. If it's still fail after transmitting nodal points attempt several times, it proves the channels blocking seriously or system fault lead timeout so that exit the transmitter data pattern and send out the acousto-optic alarm signal to remand user check up system. It is the same to the receive section on change communication channel. It is just needed to change the value of register CHANNR.

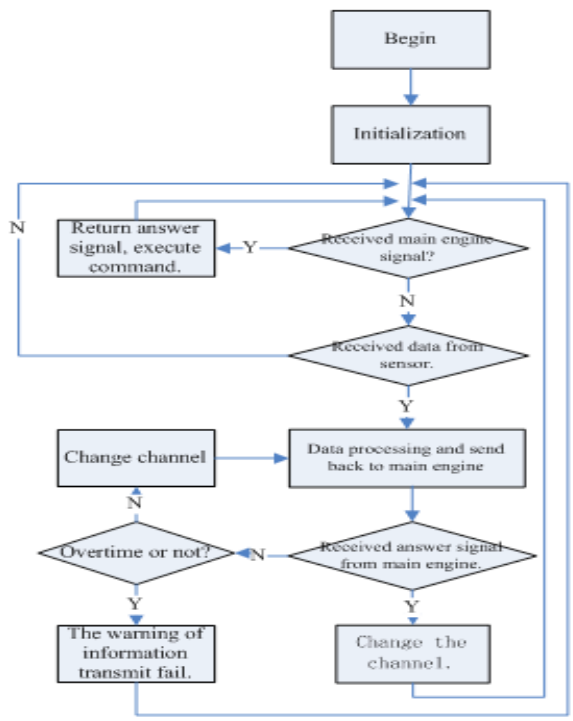

Figure 11. Transmit Section Flow Chart

6. System Superiority and Characteristic

The swarm-robot system which on the basis of CC2510 adopts FHSS communication realizes work. FHSS communication has many advantages, such as high quality communicates, fast speed communicates, optional use space source, etc. it is can promote each

swarm-robot work together. The communication range of frequency-hopping communication has pseudo-randomness and frequency range uses the amount of frequency-hopping communication has security. It has certain classified ability if others don't know the frequency range in use. When frequency-hopping frequency range increase, it has the ability of interception resistance. It makes the frequency-hopping which can be used in the swarm-robot system with the demand of security.

As the carrier frequency is hopping, it possesses resisting single frequency and partial bandwidth interferential ability. When the number of frequency hopping enough, as frequency-hopping bandwidth wide enough, the capacity of resisting disturbance become very strong. Using the speeding hop of carrier frequency has the frequency diversity function. Thereby, the system has resisting multipath declining ability on the condition that the frequency interval needs to greater than correlation bandwidth[19-22]. The scope of application which basing on frequency-hopping wireless SCM herd-system is broad, well portability, system communication protocol simple and easy to understand.

7. Epilogue

According to test, system design has already achieved the expectant function and qualification. Based on CC2510, the swarm-robot motor system adopts frequency hopping communication and apply in swarm-robot systems. Realizing each swarm-robot can speed the information interactive cooperation with multi-sensory. It can satisfy the request of swarm-robot communication with high speed. Strong capacity of resisting disturbance, high usage of space resource, high quality communication, all of this can satisfy the demand of robot communication system. The swarm-robot can be extensively used in such occasions. The controlling garages store, wireless two vehicles supervise in the expressways, the managing of shipping lane, etc. have bright prospects.

8. Acknowledgements

The authors are highly thankful for the financial support of National Defense Basic Research Project (B3720110008)

References

[1] Christodoulou, C. I., et al. (2010)Comparison of AM-FM features with standard features for the classification of surface electromyographic signals, *In*: IFMBE Proceedings. Chalkidiki, Greece. p. 69-72.

[2] Min, K. R., et al. (2008). Highly conductive and transparent electrodes for the application of AM-OLED display, *In*: Proceedings of International Meeting on Information Display. Ilsan, Korea, Republic of. p. 813-815.

[3] Das, P., et al. (2010). Infrared spectra of dimethylquin olines in the gas phase: Experiment and theory. *Journal of Physical Chemistry* A. 114 (32) 8351-8358.

[4] Peng, J. S. (2010). The design and achievement of motor speed remote control system based on CC2510, *In*: Proceedings -2010 International Conference on Communications and Intelligence Information Security, ICCIIS 2010. Nanning, Guangxi, China. p. 196-199.

[5] Hairong, X., et al. (2006). Design of wireless sensor network node CC2510 based and study on communication protocol, *In*: Proceedings of IEEE ICIA 2006 - 2006 IEEE International Conference on Information Acquisition. Weihai, Shandong, China. p. 316-320.

[6] Lopelli, E.,Van Der Tang, J. D., Van Roermund, A. H. M. (2007). A 1 mA ultra-low-power FHSS TX front-end utilizing direct modulation with digital pre-distortion, *In*: *IEEE Journal of Solid-State Circuits.* 445 Hoes Lane / P.O. Box 1331, Piscataway, NJ 08855-1331, United States. p. 2212-2223.

[7] Trabelsi, H., et al. (2010). An 863-870 MHz spread-spectrum FSK transceiver design for wireless sensor. *Microelectronics Journal*, 41 (8) 465-473.

[8] Mpitziopoulos, A., Gavalas, D. (2009). An effective defensive node against jamming attacks in sensor networks. *Security and Communication Networks*. 2 (2) 145-163.

[9] Tan, X., Shea, J. M. (2008). An EM approach to multiple-access interference mitigation in asynchronous slow FHSS systems. *IEEE Transactions on Wireless Communications,* 7 (7) 2661-2670.

[10] Zummo, S. A. (2008). Analysis of coded FHSS systems with multiple access interference a in nakagami fading, *In*: IEEE Vehicular Technology Conference. Marina Bay, Singapore, p. 1737-1740.

[11] JIANG, W., MA, Y. (2007). Bit error rate analysis of Wi-Fi and bluetooth under the interference of 2.45 GHz RFID. *Journal of China Universities of Posts and Telecommunications*. 14(SUPPL. 1), p. 89-93.

[12] Strasser, M., Popper, C., Capkun, S. (2009). Efficient uncoordinated fhss anti-jamming communication, *In*: Proceedings of the International Symposium on Mobile Ad Hoc Networking and Computing (MobiHoc). New Orleans, LA, United states. p. 207-217.

[13] Oh, B. J., Chen, C. W. (2008). Energy efficient H.264 video transmission over wireless ad hoc networks based on adaptive 802.11e EDCA MAC protocol, *In*: 2008 IEEE International Conference on Multimedia and Expo, ICME 2008 - Proceedings. Hannover, Germany, p. 1389-1392.

[14] Sui, H., Zeidler, J. R. (2006). Erasure insertion for coded DUSTM-FHSS systems without a priori knowledge, *In*: IEEE International Conference on Communications. Istanbul, Turkey, p. 5040-5046.

[15] Maghsoodi, Y., Al Dweik, A. (2008). Error-rate analysis of FHSS networks using exact envelope characteristic functions of sums of stochastic signals. *IEEE Transactions on Vehicular Technology,* 57(2) 974-985.

[16] Cervinka, A., Gauvreau, J. L., Kassis, V. (2005). Low power multihop mesh FHSS communications for wireless sensor and actuator networks in harsh environments, *In*: Technical Papers of ISA. Chicago, IL, United states, p. 860-871.

[17] Hamdi, K. A., Pap, L. (2007). Multiple-access capability of synchronous FHSS wireless networks: An analysis of the effects of the spacing between hopping carriers. *IEEE Transactions on Communications*, 55 (3) 593-604.

[18] Sheela Rani, B., et al. (2010). On board communication subsystem for Sathyabama University nano-satellite, *In*: Proceedings of the International Conference on Recent Advances in Space Technology Services and Climate Change - 2010, RSTS and CC-2010. Chennai, India. p. 143-145.

[19] Han, Y. K., Yang, K. (2009). On the Sidel'nikov sequences as frequency-hopping sequences. IEEE Transactions on Information Theory, 55 (9) 4279-4285.

[20] Kang, J. J., Teh, K.C. (2005). Performance of coherent fast frequency-hopped spread-spectrum receivers with partial-band noise jamming and AWGN, *In*: IEE Proceedings: Communications. p. 679-685.

[21] Chen, Z., et al. (2010). Research on carrier tracking in hybrid DS/FH spread spectrum TTC system, *In*: Proceedings of the 2010 2nd International Conference on Future Computer and Communication, ICFCC 2010. Wuhan, China. p. V2796-V2800.

[22] Raja Kumar, R., et al. (2010). Secure communication using chaos in multiple access environment, *In*: Proceedings of the 8th WSEAS International Conference on Applied Electromagnetics, Wireless and Optical Communications, ELECTRO '10. Penang, Malaysia. p. 15-19.

Author Biography

Jiansheng Peng is teaching at The Hechi University since 2004. He served as Lecturer. He obtained Phd from the China Institute of Atomic Energy in 2010. He is also a Senior Engineer. His research interest includes Robot path planning navigation.