The Design Research of Intelligent Suitcase

Yongchuan Li
Arts College of Nanjing Tech University, Nanjing
Jiangsu, 211816, China
343379765@qq.com

Journal of Digital
Information Management

Abstract: *By means of advanced mobile internet technology and combining with practical problem in use of suitcase, the smart suitcase is researched and developed to meet users' demands for safety, carrying and entertainment, so as to provide users' trip with intelligent solution. Meanwhile, the innovation of core functional units of smart suitcase is proposed to implement intelligent design of traditional suitcase, research suitcase relevant elements repeatedly, improve function, shape, structure, material, technology as well as color, and enhance product quality via design. On the one hand, the topic research refreshes traditional trip mode so that people can experience the convenience of smart trip; on the other hand, it provides people with faster use mode and meets users' demands for personalized as well as high-tech products. Nowadays, the design of smart products under the era of internet of things has become a new trend, which meets users' demand for suitcase, enables users to control smart suitcase easily with enjoying the comfort brought by the product, and keeps creating benefits for users and society.*

Categories and Subject Descriptors
D.2.2 [Software Engineering]: Design Tools and Techniques

General Terms
Design, Experimentation, Human Factors

Keywords: Industrial Design, Intelligent Suitcase, Scheme Innovative Design, Design Evaluation

Received: 2 June 2017, Revised 19 June 2017, Accepted 8 July 2017

1. Introduction

Suitcase refers to the instruments to hold articles and easy to be carried, which meets the people's needs to carry daily necessities when traveling. In the earliest, the suitcases holding articles were handbags and briefcases, which were then evolved into wooden boxes or other heavy wooden trunks. Until now, with the development popularity of air travel, various suitcases are designed to be lighter and portable hard plastic or cloth luggage and suitcases. Most of the suitcases feature built-in ferries, and can be pulled by the pulling rod[1]. The suitcase design is evolving with updating materials and more mature technology, so as to provide people with a more comfortable and portable way of travel[2].

After decades of development, China's luggage industry has occupied a considerable proportion of the world. China is not only the manufacturing center of the world, but the world's largest consumer market. In 2015, China's suitcase industry achieved an output of nearly RMB 100 billion and a yield of 157 million sets, which are still increasing at an annual rate of 33%. In this context, China's luggage enterprises to imitate foreign products and problem of homogenization are serious, resulting in being unable to meet the social requirements of sustainable development. It is an important issue to be considered by all luggage enterprises to change the manufacturing mode from imitation to independent innovation. Suitcase is an important branch in the luggage industry. With the development of the Internet of Things, traditional suitcases will also be innovated and developed with the trend. The intelligent transformation of the suitcase will be an

important opportunity for the development of the suitcase industry. It is estimated that the intelligent suitcase will account for 70% of the total market share, and the suitcase will not only hold articles, but become an important interface to the Internet economy.

Through literature retrieval of this subject in recent years, domestic researches on smart suitcase design mainly focus on experience design, interactive interface design, intelligent hardware design, intelligent software design and so on. Comparatively speaking, theories and practices on experience design of smart suitcase are the most abundant. For example, Huang Lingyu, Wang Zeng (2014) discussed how to design products that could better meet users' using experience as well as put forward major methods to conduct product experience design through analysis of several differentiated product experience design cases[3]. Dong-hyu Kim, Heejin Lee (2016) guide not only the platform leaders in designing user interfaces, user experiences, and marketing strategies, but also firms that want to defend themselves from platform envelopment while devising defensive strategies in platform and standards competition[4]. Kuo-Yi Lin, Chen-Fu Chien, Rhoann Kerh (2016) propose a UNISON framework for data-driven innovation to capture the user experience and preference among the factors of product form designs to derive useful rules[5]. Kang Hui, Li Jing (2013) illustrated expression patterns of experience design and influencing factors of user experience design as well as interpreted experience design and its basic features and emotional functions[6]. Advantages of experience design make it likely that users can be provided with more comfortable experience. Besides, researches on interactive interface design can also be widely seen on periodicals. For instance, Sun Hongjuan (2015) considered that as the operator and user of interactive interface, human beings should be regarded as the core of interactive interface design, so that the overall level of interactive interface design can be raised[7].

There are also some researches on intelligent hardware design. For example, Mu Guang (2014) focused on using Internet of Things to drive the innovation of intelligent hardware[8]. Some researches pay attention to intelligent software design. Li Zhaosheng, Li Wei, Fu Dezhen and Yin Jianxin (2013) adopted special lighting effects to achieve the connection between beautification and synthesis, thus revealing perspective background's effects on beautifying the work[9].

In short, many domestic and foreign researches about suitcase focus on experience design and interactive interface design, which put less attention to the design of smart trip product based on user experience. The research on design of smart trip product that enhances users' experience is just the problem that this topic wants to solve. This thesis aims at researching the design of smart suitcase. Based on summary of domestic and foreign research findings as well as actual situation of domestic bag and suitcase market, problems existing when people go out with suitcases are solved and an intelligent product design scheme which conforms to users' requirements and user experience is put forward.

2. Research Methods

A variety of research methods are used in this subject:(1) *Literature research method.* Laying theoretical foundation for design research by referring to the books and journal articles related to product systematic design; guaranteeing research advancement via collecting suitcase knowledge in internet and understanding the market. (2) *Field investigation*. Going deep into the site of enterprise design, manufacturing and sales so as to survey design situation, market, customer demands, and service condition. (3) *Grounded theory.* As a kind of qualitative research, grounded theory mainly aims to establish theory based on experience and materials. Generally, researchers often start from practical observation without any theoretical hypothesis; they conclude experience from original material and then rise to systematic theory.

3. Result Analysis and Discussion

3.1 Market Positioning of Intelligent Suitcase

The suitcases are essentials for travel, but they have many deficiencies. For example, the suitcases are not wearable, the draw-bars are broken easily, they are not easy to be cleaned and it is difficult for people to carry them when climbing up and down stairs. These problems are affecting most users. 200 questionnaires about the traditional suitcases were issued, 198 questionnaires were actually recovered and 190 valid questionnaires were analyzed. The most prominent problems were found in the traditional suitcases. They are shown in the following figure.

It can be seen that the problems that the draw-bar is easy to break and it is difficult for people to go up and down stairs carrying the suitcases account for a large proportion 80%.The second disadvantage is that it will take a large space when they are not used, which accounts for 60%.These deficiencies can be consciously solved in the design process. Improving the material process of the draw-bar can solve the problem that the draw-bar is easy to break. People can be given a better experience by reducing the weight of the suitcase when walking up and down the stairs. We can use it as a safe when the suitcase is not used. The problems can be solved by realizing the multiple use of function.

3.2 Population Positioning of Intelligent Suitcase

Intelligent suitcases are used widely. Divided based on the age of population, it is not easy to conduct design, so that it is necessary to find a new way to classify users. Research and analysis can be conducted according to the intended use of the suitcase and combining with the age characteristics.

The color style, use environment and use demand of suitcases change with their intended uses. Suitcases can

be used for business trips, travel for returning to home, tourism trips and short trips. Specific analysis is conducted according to the specific purpose.

Divided based on the user age, basic functions of intelligent suitcases is relatively simple, suitable for users in several stages of age. Other complex functions, such as the APP, will be aimed at young people, mainly from the age of 20 to 40, who hold the following characteristics:

Strong purchasing power. Young people have their own stable income, with a strong desire for consumption and buying their favorite products. With the increase in income, they bring immeasurable market value.

Pursuit of fashion and trends. Young people actively take the leader to experience new things, pay more attention to fashionable products and pursue fashion and personality.

3.3 Application of Ergonomics in the Design of Intelligent Suitcase

Ergonomics is a discipline that studies the interaction between man, machine and environment, aiming to provide people with safe and comfortable conditions and improve work efficiency. In real life, the people's habits, lifestyle and other conditions are uncertain, which requires the "machine" in ergonomics to be suitable for the people; corresponding products should be designed for targeted population. To design a suitcase to meet the needs of targeted population, it needs to understand the habits, lifestyle and psychological factors of targeted population.

In the design of intelligent suitcase, great importance should be attached to the following two aspects from the point of view of ergonomics:

The relationship between intelligent suitcase and people.

The coordination between things and people constitutes an important part of ergonomics research. The human factor is the most important factor, including physiological and psychological factors. In the design of intelligent suitcase, it needs to consider whether the suitcase accords with the physiological factors and meet the psychological factors. The design audience of intelligent suitcase is independent individuals rather than groups. The development of suitcase market becomes more diversified, and the design trends will increasingly tend to individuals. Designed for individuals, it requires the structure and color style of the suitcase to conform to the ergonomics.

The relationship between intelligent suitcase and environment.

The design of suitcase needs to consider environmental factors, namely harmony of the suitcase with the environment. For example, the intelligent suitcase in the workplace shows more formal, more dignified and more professional. For different scenarios, the target users' use environment should be carefully analyzed in the design of suitcase, thereby blending into the environment.

3.4 Humanized Design Principle

According to people's habit, physical structure and physiological situation, the humanized design principle is optimized based on the existing function design to further meet people's demand and show the people-oriented thought.

Humanized design can't exist without the study on body's physiological structure. A reasonable design needs to meet people's appearance and size. The data of people's dimension comes from anthropometry which is a science that studies physical characteristics of people by applying measurement and observational method. In the design of intelligent suitcase, body measurement data is very critical to the design of suitcase. Body data varies with the differences of age, gender and other factors. As the adult is the target user of intelligent suitcase, it mainly studies the dimension of adult[10].

Smart suitcase must take advantage of human body dimensions and design according to human body data. In suitcase design, we must consider from the perspective of carrying and pulling comfort. The functional hand height of most adult males was 741-828mm. The functional hand height of females was 704-778mm. This required us to adapt the heights of suitcase and adjusted trolley to functional hand heights of most males and females. However, people always changed their positions and moving. During movement, each part of the body had a functional space. When designing a smart suitcase, we needed to consider the influence of the sizes of these functional spaces.

3.5 Analysis of Innovative Design Points

According to the market research and analysis of population positioning, several innovative design points are put forwards as follows[11]:

Complete Magnesium-Aluminum Alloy: The suitcase is made of magnesium-aluminum alloy, making it light and stable.

Anodic oxidation sandblasting process: advanced anodic oxidation sandblasting process is used, and the appearance of the suitcase is delicate and textured. The shell subject to sandblasting is more wear resistant and corrosion resistant, which can keep the suitcase as new one for a long time and make it easy to clean in case of getting dirty.

Large capacity battery cells and detachable battery pack: the suitcase features large capacity battery cells, which can ensure long-time standby of the suitcase and can also be used for charging the user's digital products. The built-in battery can be disassembled. For instance, when the user's suitcase needs to be checked in, there is no

need to worry about the airways traffic regulations; the user needs to disassemble the battery before shipment and carry it on board.

Design of Handle: The handle of common suitcase can only be adjusted in 3 sections of the height, while the handle of intelligent suitcase can be adjusted in 30 sections of the height, so as to make it the most comfortable to the users with a height at different levels.

Damping System: The latest developed universal wheel with suspension is used in the intelligent suitcase, in order to protect the articles within it from damaging when dragged. Suspension system is designed in the ordinary wheels, which can maximize its vibration on the rugged road.

All-around Safety System: Complete magnesium-aluminum alloy can ensure that the suitcase is not easily damaged. Fingerprint lock ensures that the suitcase will not be easy to open, so as to ensure the safety of luggage. GPS positioning system ensures that the suitcase cannot be lost, achieving all-around safety protection[12].

Intelligent Control System: A set of high-performance APP has been developed for intelligent suitcase, through which the full state of the suitcase can be easily managed with a mobile phone. Of course, the developed APP is not only a tool for users to operate the suitcase, but a platform for users to carry out travel communities.

3.6 Innovative Designs

Analysis of modeling function

Combined with the analysis of the advantages and disadvantages of the existing suitcase modeling, the intelligent suitcase is designed to meet all the functional requirements as far as possible as well as the aesthetic needs of users on the suitcase. The mobile APP is designed following the principle of interactive design, making it beautiful and easy to operate[13].

The computer performance provides the medium for the authenticity of the product sketch scheme and makes the product scheme design be shown more completely. After finishing the sketch design, by using computer three-dimensional design software, the sketch scheme

Figure 1. Appearance Rendering of the Intelligent Suitcase

Figure 2. Demonstration of APP Interface

appearance, material and color and other elements are more accurately shown so that the final effect diagram (Figure 1) are formed. The construction of 3D model makes the product size more accurate and the structure more clear. The effect diagram makes the product texture, material, color and other elements be shown more fully.

Interface design is the medium for users to perceive and use products. Users control the suitcase by the mobile phone interface, so the interface must be beautiful and concise so that users can feel comfortable. Interface is the presentation of information architecture, so the information architecture must be able to help users complete tasks quickly[14]. Figure 2 shows the dynamics of the tour cycle. For one-press unlocking of suitcase and safe setting of suitcase, the interface displays the information completely so that users are very convenient to use[15].

Figure 4 is the layout of the interior components of the suitcase. Because the suitcase needs to be filled with things and it needs to hold more things, the space of the inner component is limited. Making the inner components be fixed smoothly at the back of the whole suitcase can solve such problems. The charging and discharging module is removable in order to charge mobile phones and other electronic products and supplement energy for primary batteries. The main internal battery is the part that provides the power for the smart suitcase to connect with the mobile phone and other interior components. Reserve battery is the reserve hidden energy which is used to prevent the main battery out of power. Connecting your mobile phone to the suitcase can be realized by Bluetooth. Data transmission can be finished in mobile communication by GPRS master control, which has the characteristics such as low price and high transmission rate. GPS positioning system can prevent the loss of

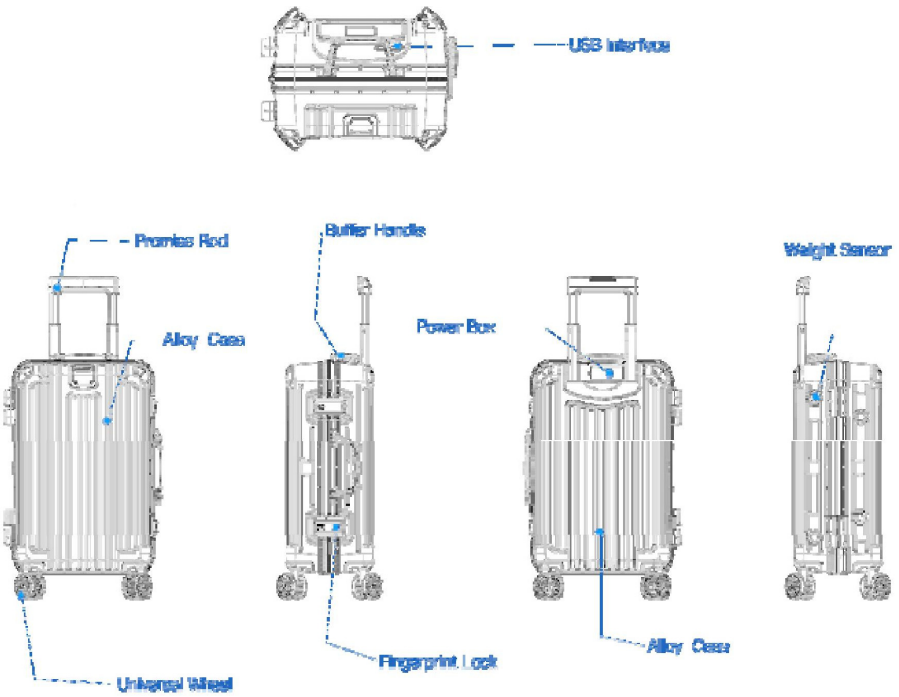

Figure 3. Main Functions of the Intelligent Suitcase

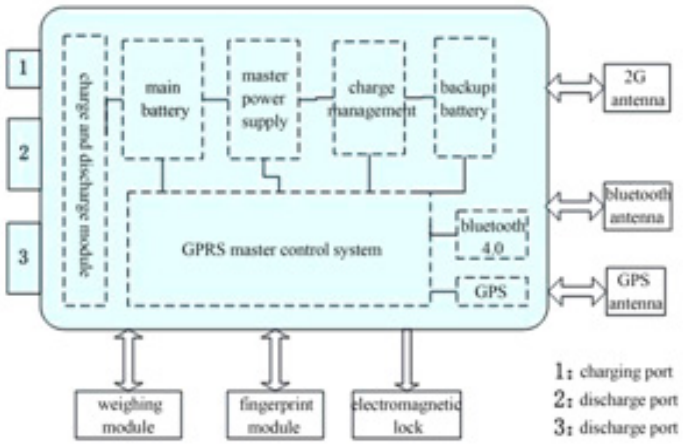

Figure 4. Layout of the Internal Components of the Intelligent Suitcase

suitcase. After losing the suitcase, you can retrieve it by mobile phone. The weighing module is externally attached to suitcase support, which can acutely be aware of the weight of suitcase. The fingerprint module is at the the side opening of the suitcase, which can make fingerprint unlocking easier, safer and more convenient. The design of electromagnetic lock is the same as electromagnet, which is based on the principle of electricity generated magnetism. When the current passes through the silicon steel sheet, electro magnetic locks produce powerful suction which will tightly adsorbed iron plate to make the suitcase be locked. The whole system is connected and coordinated with each other so as to realize the intellectualization of the suitcase[16].

3.7 Product SWOT Analysis and Competitive Product Analysis

SWOT analysis is also called situation analysis method. SWOT four English letters are represented respectively: Strength, Weakness, opportunity and Threat. The SWOT analysis is also called situation analysis, which means the main internal strengths, weaknesses, opportunities and threats that are closely related to the research object are listed by the investigation and arranged in the form of matrix, then, by using the idea of system analysis, the various factors are matched and analyzed so that a series of corresponding conclusions are drawn. And conclusions usually are decisive. By using this method, we can make a comprehensive, systematic and accurate study on the situation in which the research object is situated so as to formulate corresponding development strategies, plans and countermeasures according to the results of the study.

Samsonite's traditional suitcase is taken as an example to make a comparative analysis. Intelligent suitcases make the advanced mobile Internet technology applied to traditional luggage field, which is an innovation of traditional luggage. Customer positioning of Intelligent

Strength(S): 1. The highest level of product intelligence. 2. The strongest product safety. 3. The lower product price and highest cost performance.	Weakness(W): The market recognition is insufficient.When the products have just been put into the market, the products are not recognized by customers in a short time due to the small scale of operation and the lack of publicity, which affects the income of the products. Countermeasure: A variety of ways are used for market promotion in order to achieve the maximum promotion effect in the shortest time.
Opportunity(O): 1. Favorable policy and national policy support the manufacturing industry and Internet technology to promote industrial upgrading. 2. The intelligent application of mobile Internet is in the ascendant and intelligence has become the inevitable trend of the development of luggage industry. 3. People are more and more dependent on smart products and mobile networks.The demand for smart suitcases is huge and its development prospects are bright.	Threat(T): If the product to be invested has not been achieved, the product advantage of the company may be surpassed by peers so that the opportunity to seize market share will be lost. Countermeasure： 1. Legal protection for the products can be realized by patent applications and registered trademarks. 2. Speed up the implementation of the project and strive to make the project into operation in the shortest time to seize the market opportunities.

Table 1. Product SWOT Analysis

Brand	Samsonite	Intelligent suitcase
Strength	High brand awareness and reputation	The product is more intelligent and has more practical functions than traditional luggage. The product has many functions, low price and high cost performance.
Weakness	The foundry is responsible for all the product development and it has no its own R & D department. The new product development has low controllability and slow progress.	Products are in the R & D stage and lack of the market recognition and do not form a brand effect.

Table 2. Competitive Product Analysis

suitcase aims at high-end customer group, which is the same as the customer group of the well-known brand Samsonite of the traditional suitcase. Table 2 is a comparative analysis of smart suitcase and the traditional suitcase Samsonite.

As shown in Table 2, the smart suitcase has obvious advantages, as soon as it is put into production and vigorously promoted, it will be able to stand out in the competition of the suitcase market.

3.8 Evaluation of Smart Suitcase Design

Design evaluation, as an important step of product system design, plays an important role in improving the level of product design and influencing the future trend of products. The evaluation content mainly includes the following:

(1) Establish Evaluation Index System

Firstly, the evaluation index system of intelligent suitcase design evaluation is determined and 4 criteria level indicators should be set such as B={B1 modeling, B2 function, B3 man-machine, B4 other} and the index level includes 15 evaluation indexes (C1——C15),as shown in table 3[17].

(2) Define comment set E, E={excellent, good, medium, general, poor} and use "5, 4, 3, 2, 1" to express 5 evaluation standards.

(3) Establish two-level fuzzy comprehensive evaluation model

After the evaluation of each factor, the evaluation is carried out step by step according to the hierarchy and subordinate relationship. The comprehensive evaluation of each level forms a single factor evaluation of the upper level and constitutes a two-level comprehensive evaluation system.

① One-level fuzzy comprehensive evaluation model

a) Weight Calculation

Weight is a quantitative representation of the importance of evaluation factors and the value of the relative importance of the factors in the overall evaluation of things. Its rationality directly affects the final comprehensive evaluation results. The weight coefficient g_i means the level for the importance (including $\Sigma\, g_i = 1,\ 0 \le g_i \le 1$). Generally, the four points system scoring method is used to determine the importance and weight value of each evaluation target. The evaluation objectives and comparative goals are listed in the vertical and horizontal coordinates of the discriminant table and are compared according to their importance. Finally, the weight values are calculated g_i, $g_i(i = 1,2,..,n)$, which means weight set $G_i = (g_{i1}, g_{i2}, \ldots, g_{in})$.

$$gi = \frac{ki}{\sum_{i=1}^{n} ki}$$

n is the evaluation target in the formula, ki is the sum of the scores of an evaluation target relative to other evaluation objectives.

Target level	Criterion level	Index level			
A Evaluation of modeling design of intelligent suitcase	Modelling B1	Elegant modeling C1	The shape conforming to the tidal current C2	Detail and overall matching C3	Color and style are consistent C4
	Functions B_2	Fingerprint unlocking C5	Community platform C6	Loss prevention C7	Charging function C8
	Ergonomics B_3	Comfort of operation C9	Interface ease of use C10	Size appropriateness C11	Harmony with environment C12
	Others B_4	Use security C13	Reasonable material technology C14	Sustainability C15	

Table 3. Establish Evaluation Index System

The relative importance of each evaluation index is determined by the mandatory judgment method. The total evaluation is the weighted coefficient statistics of the criterion level, as shown in table 4.The statistics of the weighted coefficients of the sub criterion level are shown in Table 4 - Table 7.

The evaluation indexes / The contrast indexes	Elegant modeling	The shape conforming to the tidal current	Detail and overall matching	Color and style are consistent	ki	gi
Elegant modeling	-	3	2	2	7	0.292
The shape conforming to the tidal current	2	-	3	2	7	0.292
Detail and overall matching	2	2	-	2	6	0.25
Color and style are consistent	1	1	2	-	4	0.166
∑ki=24，∑gi=1						

Table 4. Modelling of Indexes

The evaluation indexes / The contrast indexes	Fingerprint unlocking	Community platform	Loss prevention	Charging function	ki	gi
Fingerprint unlocking	-	1	4	2	7	0.292
Community platform	1	-	2	2	5	0.208
Loss prevention	4	1	-	2	7	0.292
Charging function	1	2	2	-	5	0.208
∑ki=24，∑gi=1						

Table 5. Functional Parameter

The evaluation indexes / The contrast indexes	Comfort of operation	Interface ease of use	Size appropriateness	Harmony with environment	ki	gi
Comfort of operation	-	4	2	2	8	0.333
Interface ease of use	4	-	2	1	7	0.292
Size appropriateness	3	1	-	1	5	0.208
Harmony with environment	1	1	2	-	4	0.167
∑ki=24，∑gi=1						

Table 6. The Ergonomic Indicators

The evaluation indexes / The contrast indexes	Use security	Reasonable material technology	Sustainability	ki	gi
Use security	-	3	3	6	0.5
Reasonable material technology	1	-	2	3	0.25
Sustainability	1	2	-	3	0.25
∑ki=12，∑gi=1					

Table 7. Others Indicators

b) Construction of Evaluation Matrix

The single factor was evaluated by 5 experts scoring and the evaluation matrix of the 4 criterion level was obtained from the statistical results, as shown in table 8:

$R_{\text{modelling}} = \begin{bmatrix} 0.3 & 0.6 & 0.1 & 0 & 0 \\ 0.4 & 0.2 & 0.4 & 0 & 0 \\ 0.3 & 0.4 & 0.3 & 0 & 0 \\ 0.2 & 0.6 & 0.2 & 0 & 0 \end{bmatrix}$	$R_{\text{Functions}} = \begin{bmatrix} 0.6 & 0.2 & 0.2 & 0 & 0 \\ 0.4 & 0.3 & 0.3 & 0 & 0 \\ 0.4 & 0.2 & 0.3 & 0.1 & 0 \\ 0.2 & 0.4 & 0.2 & 0.2 & 0 \end{bmatrix}$
$R_{\text{ergonomics}} = \begin{bmatrix} 0.2 & 0.2 & 0.3 & 0.1 & 0.2 \\ 0.2 & 0.2 & 0.6 & 0 & 0 \\ 0.1 & 0.2 & 0.3 & 0.1 & 0.3 \\ 0.4 & 0.2 & 0.4 & 0 & 0 \end{bmatrix}$	$R_{others} = \begin{bmatrix} 0.2 & 0.6 & 0.2 & 0 & 0 \\ 0.3 & 0.4 & 0.2 & 0.1 & 0 \\ 0.2 & 0.2 & 0.4 & 0.2 & 0 \end{bmatrix}$

Table 8. Evaluation Matrix

The evaluation indexes / The contrast indexes	Modelling	Functions	Ergonomics	Others	ki	gi
Modelling	-	4	3	2	9	0.375
Functions	2	-	2	3	7	0.292
Ergonomics	2	2	-	2	6	0.25
Others	0	1	1	-	2	0.083
∑ki=24，∑gi=1						

Table 9. Overall Merit

c) Calculate Comprehensively-Evaluated Value

Single factor evaluation results:

$$R_{modelling} = [0.292 \quad 0.292 \quad 0.25 \quad 0.166] \begin{bmatrix} 0.3 & 0.6 & 0.1 & 0 & 0 \\ 0.4 & 0.2 & 0.4 & 0 & 0 \\ 0.3 & 0.4 & 0.3 & 0 & 0 \\ 0.2 & 0.6 & 0.2 & 0 & 0 \end{bmatrix}$$

$$= [0.3126 \quad 0.4332 \quad 0.2542 \quad 0 \quad 0]$$

According to the maximum subordination principle(Select the highest value), the comprehensive evaluation of the formative factors of the intelligent suitcase is good.

Results calculated by the same way:

$$R_{functions} = [0.4168 \quad 0.2624 \quad 0.25 \quad 0.0708 \quad 0]$$

The comprehensive evaluation of the functional factors of the intelligent suitcase is good.

$$R_{ergonomics} = [0.2126 \quad 0.2 \quad 0.4043 \quad 0.0541 \quad 0.129]$$

The comprehensive evaluation of the man-machine factors of the intelligent suitcase is good.

$$R_{others} = [0.225 \quad 0.45 \quad 0.25 \quad 0.075 \quad 0]$$

The comprehensive evaluation of other factors of the intelligent suitcase is good.

② Two-level fuzzy comprehensive evaluation model

a) Weight calculation

After the one-level fuzzy comprehensive evaluation is finished,single factor evaluation constitutes two-level multi factor fuzzy evaluation matrix and weighting values are determined by using an imposing judgment method, as shown in Table 9[18].

b) Calculation Comprehensive Evaluation Value

The results of comprehensive evaluation are as follows:

$$R = [0.375 \quad 0.292 \quad 0.25 \quad 0.083] \begin{bmatrix} 0.3126 & 0.4332 & 0.2542 & 0 & 0 \\ 0.4168 & 0.2624 & 0.25 & 0.0708 & 0 \\ 0.2126 & 0.2 & 0.4043 & 0.0541 & 0.129 \\ 0.225 & 0.45 & 0.25 & 0.075 & 0 \end{bmatrix}$$

$$= [0.3107556 \quad 0.3264208 \quad 0.29015 \quad 0.0404236 \quad 0.03225]$$

According to the maximum subordination principle, the comprehensive evaluation result of the intelligent suitcase is middle. With hundred mark system $\{100, 80, 60, 40, 20\}$, the total score of the product is:

$$X = 0.3107556 \times 100 + 0.3264208 \times 80 + 0.29015 \times 60 + 0.0404236 \times 40 + 0.03225 \times 20 = 76.8$$

From the overall assessment, although the design process takes full account of the various elements of the product design theory, which is consistent with the basic method of product system design theory, the final design is not outstanding in overall performance. Because the smart suitcase is between the middle and the good, the man-machine and other aspects need to be strengthened, for example, the evaluation results should be integrated and the design scheme should be constantly optimized to make the excellent product.

4. Conclusions

Based on practical project, the design of smart suitcase takes product systematic design theory as foundation. Besides, combining with product systematic design method, it researches the design of smart suitcase, master the key process and links of production practice, perfects academic knowledge in relevant field, and promotes management of its development direction. To design the suitcase with leading technology, advanced function and high cost performance, accords with the

public demands, and meets travelers' trip is just the obligation and responsibility of designers.

The implementation of smart suitcase design has so broad market prospect that it will be applied by more and more people with saving time and energy [19, 20]. Suitcase industry keeps developing with the constant progress of national economy and rapid growth of tourism market, so an increasing number of suitcase manufacturers start to emphasize on the design and development of smart suitcase. Under this background, the progress of smart suitcase will facilitate suitcase enterprises to form their own influential brands, obtain advantages in the competition of international suitcase market and bring huge economic as well as social benefits. This topic will continue going deep into the research so as to provide reference significance for the design of general industrial products.

References

[1] Xuemei, Li. (2009). Modern suitcase design.Southwest China Normal University Press.

[2] Lyon, Joshua. (2015). The collector's guide luggage. Country Living.

[3] Lingyu, Huang., Zeng, Wang. (2014).Product Experience Design Method Research. *Packaging Engineering*, 34 (6) 64-67.

[4] Kim, D. H., Lee, H. (2016). Effects of user experience on user resistance to change to the voice user interface of an in vehicle infotainment system: implications for platform and standards competition. *International Journal of Information Management*, 36 (4) 653-667.

[5] Lin, K. Y., Chien, C. F., Kerh, R. (2016). Unison framework of data-driven innovation for extracting user experience of product design of wearable devices. *Computers & Industrial Engineering*, 99.

[6] Hui, Kang., Jing, Li. (2013). Based on the User Experience Design in the Design of Industrial Products. China Packaging Industry (4) 27-29.

[7] Hongjuan, Sun. (2015). People-oriented User InterfaceDesign. *Packaging Engineering* (4)113-116.

[8] Mu Guang. (2014). How to Perform Under the Wave of the Internet of Things Intelligent Hardware. *PC Pro* (9) 98-99.

[9] Zhaosheng, Li., Wei, Li., Dezhen, Fu., Yin, Jianxin. (2013). The Development of Film and Television Lighting Intelligent Software Research. *Video Engineering*, 37 (10) 85-87.

[10] Zhiguo, Pan., Lanmei, Wang., Yemin, Guo. (2003). Application of Human Body Measurement in Industrial Design. *Jiangsu Machine Building & Automation* (6) 22-24.

[11] Zhang, H., Zhao, Y., Jiang, A., Zhao, G. (2011). Design of intelligent suitcase based on single chip. *International Conference on Electrical & Control Engineering,* 1043-1046.

[12] Jainwar, M. S., Rao, H. K., Varma, M. K., Tamrakar, M. H. (2016). The Intelligent Suitcase. *International Journal of Innovative Research in Electrical, Electronics, Instrumentation and Control Engineering*, (4) 40-43.

[13] Xiang, Wu. (2000). Product system design. China Light Industry Press.

[14] Norman,D. A.(2002). Emotion and Design :Attractive things work better. *Interactions Magazine,* ix (4) 36-42.

[15] Norman, D. A., Draper, S. W. (1986). User centered system design: New perspective on human computer interaction, New Jersey: Hillsdale.

[16] Bye, R. T., Osen., O. L., Pedersen, B. S., Hameed.,H I. A., Schaathun. G. (2016). A software framework for intelligent computer-automated product design. *European Conference on Modelling & Simulation.*

[17] Shunjun, Yang., Lu, Li. (2005).Construction of PAP appraisal system in product design. *Packaging Engineering.* 26 (6) 169-170.

[18] Dong, Zeng., Yaming, Chen. (2010). Application research of fuzzy synthetic evaluation in product sculpt design. Application research of fuzzy synthetic evaluation in product sculpt design. (8)119-123.

[19] Jung, Hae Sun., Yoon, Chul Sang., Lee, Yong Woo., Park, Jong Won., Yun, Chang Ho (2017). Processing IoT Data with Cloud Computing for Smart Cities, *International Journal of Web Applications*, 9 (3) 88-95.

[20] Dang, Nhac Lu (2017). Mobile Online Activity Recognition System- Based on Smartphone Sensors, *Journal of Intelligent Computing*, 8 (1) 16-21.